OPENINGS AND WEIR WALLS TO BE SIZED AND LOCATED AS REQUIRED BY FIELD CONDITIONS.

MODULES TO BE INSTALLED BY CCP BEFORE DELIVERY.

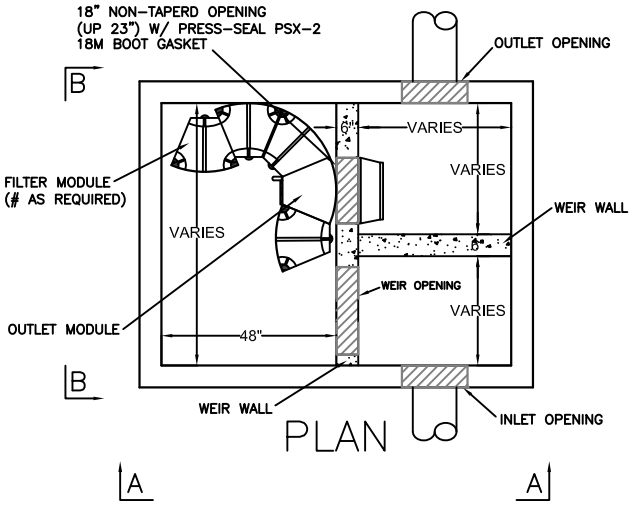

PLAN

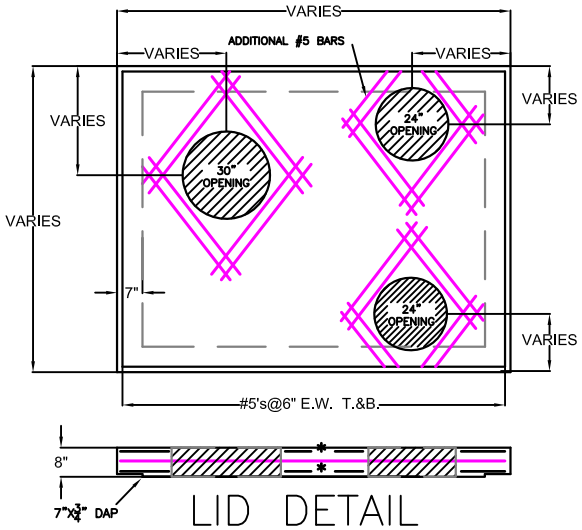

LID DETAIL

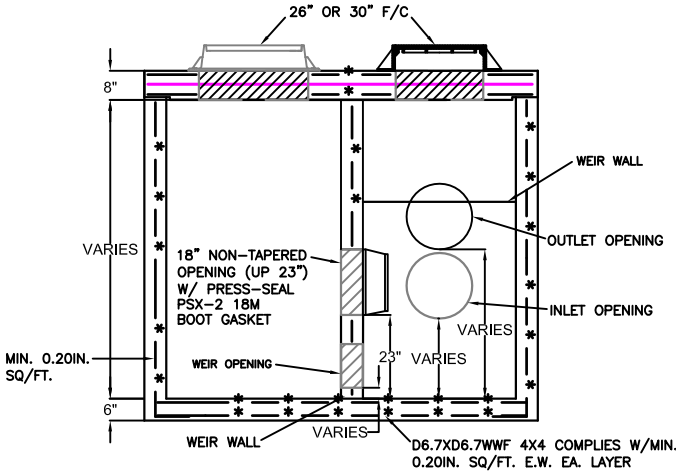

SECTION A–A

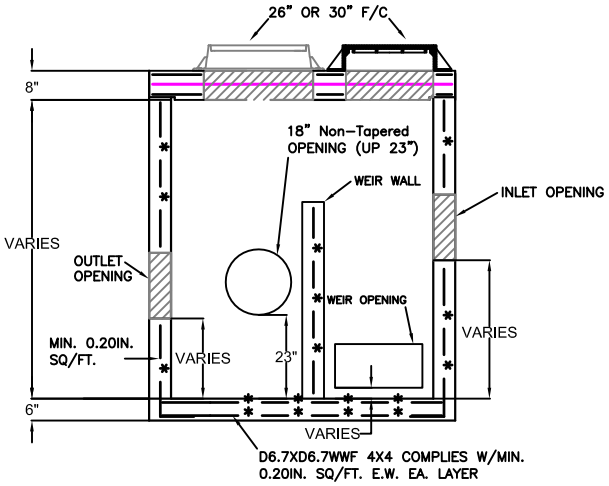

SECTION B–B

SPECIFICATIONS:

MINIMUM CONCRETE STRENGTH 4000 PSI @ 28 DAYS
MATERIALS AND WORKMANSHIP IN ACCORDANCE WITH THE REQUIREMENTS OF NEW JERSEY AND NEW YORK DEPARTMENTS OF TRANSPORTATION
STEEL REINFORCEMENT A615 GRADE 60 HORIZONTAL AND VERTICAL

Continental Concrete Products, Inc.
1 South Grosstown Rd.
Pottstown, PA 19464
Phone: (610) 327-3700
Fax: (610) 327-9488

HYDRO INTERNATIONAL UP–FLOW FILTER™ (UFF) VAULT

SIGNATURE OF APPROVAL	DATE	AR	DWG	STRUCTURE
	2/08/16		UFFV	